С-Грация

КОМПЛЕКСНОЕ СНАБЖЕНИЕ

FLUX

С-Грация представляет

Насосное оборудование торговой марки Flux
Химическиустойчивые насосы RFM и RFML

ООО “С-Грация”

Тел.: (495) 978-37-92
Тел/факс: (499) 271-55-90
Тел/факс: (499) 271-55-91
E-mail: postavka@s-graciya.ru
www.s-graciya.ru

Air-operated Diaphragm Pumps Type RFM and RFML

Innovators
in Flow Technology

FLUX AIR-OPERATED DIAPHRAGM PUMPS
TYPE RFM AND RFML OF SOLID CONSTRUCTION

FLUX air-operated diaphragm pumps are most versatile and can be used for almost every liquid in all different fields of industry.

Be it viscous products, even with solids in suspension, abrasive fluids, high flammability or aerated liquids: FLUX air-operated diaphragm pumps meet every application featuring high operation safety and reliability.

Due to their solid construction together with matched diaphragms, these self-priming pumps are especially designed for continuous operation. FLUX air-operated diaphragm pumps ensure a very smooth liquid transfer (no shearing), are insensitive to solids in suspension, safe in dry running as well as totally overload-proof.

Other main features of FLUX air-operated diaphragm pumps are their high cost efficiency and a very low noise level. Each pump can be easily dismantled for an optimum cleaning. A comprehensive range of accessories such a pulsation dampers, pressure controllers with filter unit, stroke counters and fittings guarantee a safe use of the pumps.

Which material goes best with which liquid

Material: Pump housing

Polypropylene (PP) up to 60 °C
suitable for corrosive liquids, acids and alkalis as well as neutral liquids

Polypropylene conductive (PP) up to 60 °C
suitable for high flammability liquids

Polytetrafluorethylene (PTFE) up to 100 °C
suitable for very corrosive liquids, concentrated acids and alkalis as well as neutral liquids

Polytetrafluorethylene conductive (PTFE) up to 100 °C
suitable for high flammability liquids

Material: Diaphragm, Balls and Seals

NBR (NN) up to 90 °C
Acrylonitrile-Butadiene-Rubber

EPDM (EE) up to 80 °C
Ethylene-Propylene-Diene-Rubber

FKM (VV) up to 90 °C
Fluor-Rubber

PTFE/FFKM (TK) up to 100 °C
Polytetrafluorethylene/Per-Fluor-Rubber

PTFE/EPDM (TE) up to 80 °C
Polytetrafluorethylene/Ethylene-Propylene-Diene-Rubber

PTFE/FKM (TV) up to 90 °C
Polytetrafluorethylen/Fluor-Rubber

Example of type code

RFM 25 PP/TV
RFM 25 PP/TV = **model size**
RFM 25 **PP**/TV = **material pump housing**
RFM 25 PP/**TV** = **material diaphragm and balls**
RFM 25 PP/**TV** = **material seals**

Table of Contents

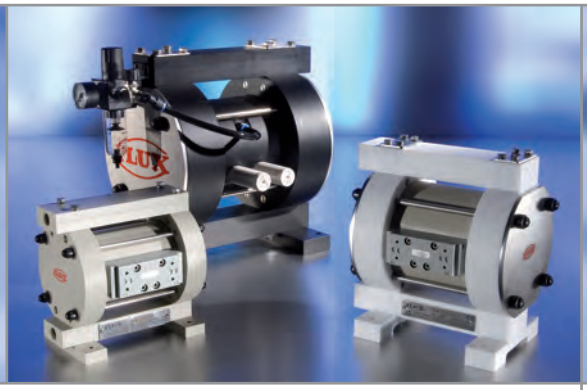

Air-operated diaphragm pumps size 3/8″ Type RFM 10 / Type RFML 10 electrically conductive	**4 – 5**
Air-operated diaphragm pumps size 1/2″ Type RFM 15 / Type RFML 15 electrically conductive	**6 – 7**
Air-operated diaphragm pumps size 1″ Type RFM 25 / Type RFML 25 electrically conductive	**8 – 9**
Air-operated diaphragm pumps size 1 1/2″ Type RFM 40	**10 – 11**
Accessories and fittings	**12 – 13**
Function and construction features	**14**

Features and benefits:

– solid pump design due to massive type of construction
– four model sizes 10, 15, 25 und 40
– max. delivery rates of 1 to 375 l/min
– pump housing in PP or PTFE
– models 10, 15 and 25 also available in conductive version Type RFML for use in hazardous areas according to ATEX-Directive 94/9/EC
– vulcanized diaphragms including a metallic core
– safe dry running and overload-proof
– self-priming
– insensitive to solids in suspension
– variable delivery rates by simply adjusting the air pressure
– very high chemical resistance
– suitable for high temperature
– high service life due to short storke lifts
– easily accessible control valve without seals

FLUX air-operated diaphragm pump Type RFM 10 in Polypropylene (PP) or Polytetrafluorethylene (PTFE), 3/8"

Technical Data

Delivery rate max.	30 l/min
Operating pressure max.	7 bar
Suction head, dry	up to 2–3 m
Suction head, liquid-filled	up to 8 m
Max. size of solids	2 mm
Connection pump	
suction side	G 3/8 (BSP 3/8" female)
discharge side	G 3/8 (BSP 3/8" female)
Connection air	
inlet	G 1/8 (BSP 1/8" female)
outlet*	G 1/8 (BSP 1/8" female)

*with silencer

Performance Chart RFM 10 / RFML 10

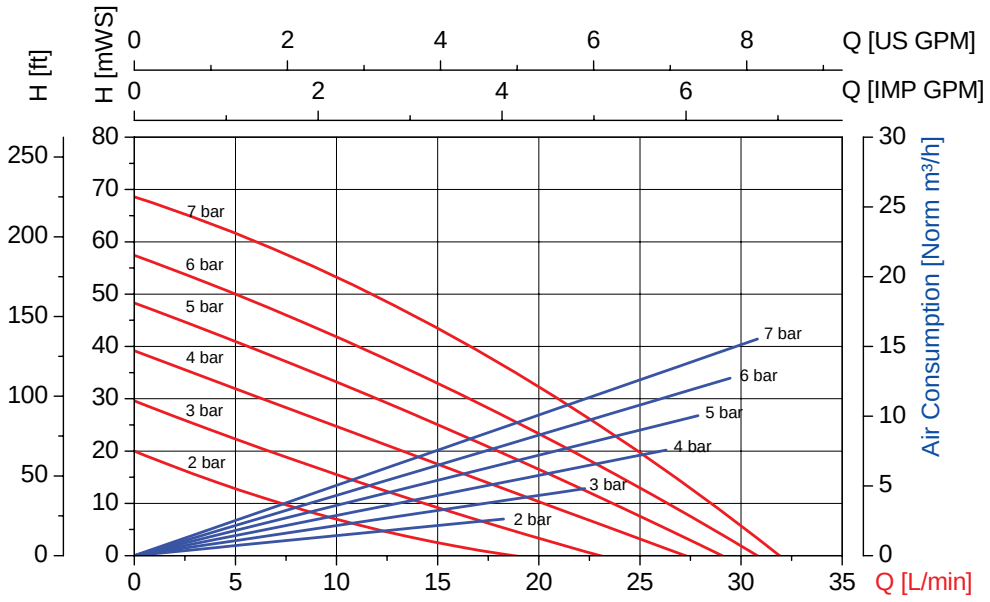

Values ± 10 % with water at 20 °C

Type / Material	Pump housing	Diaphragm/ Ball	Seal	Weight	Part No.
RFM 10 PP/NN	PP	NBR	NBR	3,0 kg	**D10 40 010**
RFM 10 PP/TK	PP	PTFE	FFKM	3,0 kg	**D10 40 120**
RFM 10 PP/TE	PP	PTFE	EPDM	3,0 kg	**D10 40 130**
RFM 10 PP/TV	PP	PTFE	FKM	3,0 kg	**D10 40 140**
RFM 10 PP/EE	PP	EPDM	EPDM	3,0 kg	**D10 40 210**
RFM 10 PP/VV	PP	FKM	FKM	3,0 kg	**D10 40 310**
RFM 10 PTFE/TK	PTFE	PTFE	FFKM	5,0 kg	**D10 00 120**
RFM 10 PTFE/TE	PTFE	PTFE	EPDM	5,0 kg	**D10 00 130**
RFM 10 PTFE/TV	PTFE	PTFE	FKM	5,0 kg	**D10 00 140**
RFM 10 PTFE/EE	PTFE	EPDM	EPDM	5,0 kg	**D10 00 210**
RFM 10 PTFE/VV	PTFE	FKM	FKM	5,0 kg	**D10 00 310**

FLUX AIR-OPERATED DIAPHRAGM PUMP TYPE RFML 10 IN POLYPROPYLENE (PP) OR POLYTETRAFLUORETHYLENE (PTFE), 3/8"

Electrically conductive for use in hazardous areas according to ATEX-Directive 94/9/EG

Technical Data

Delivery rate max.	30 l/min
Operating pressure max.	7 bar
Suction head, dry	up to 2–3 m
Suction head, liquid-filled	up to 8 m
Max. size of solids	2 mm
Explosion-proof to	Ex II 2 G cp IIB X
PTB Registration No.	04 ATEX D102-1
Connection pump	
suction side	G 3/8 (BSP 3/8" female)
discharge side	G 3/8 (BSP 3/8" female)
Connection air	
inlet	G 1/8 (BSP 1/8" female)
outlet*	G 1/8 (BSP 1/8" female)

*with silencer

Dimensions RFM 10 / RFML 10

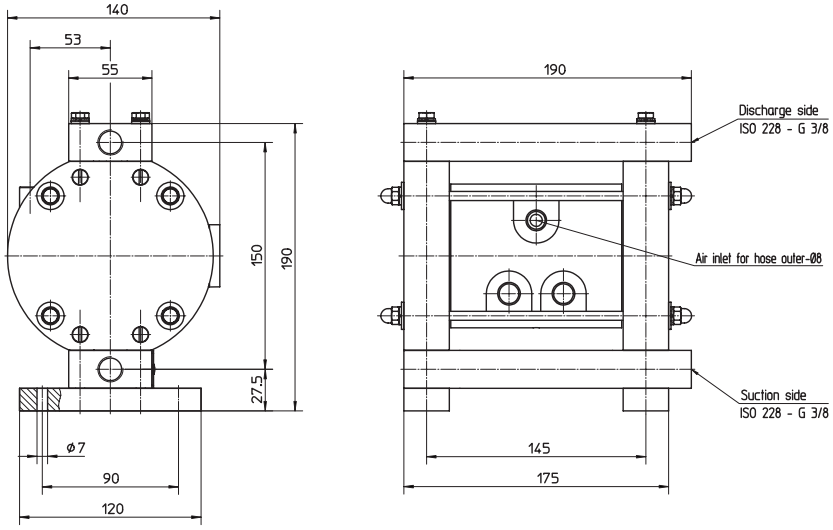

Type / Material	Pump housing	Diaphragm/ Ball	Seal	Weight	Part No.
RFML 10 PP/NN	PP conductive	NBR	NBR	3,0 kg	**D10 41 010**
RFML 10 PP/TK	PP conductive	PTFE	FFKM	3,0 kg	**D10 41 120**
RFML 10 PP/TE	PP conductive	PTFE	EPDM	3,0 kg	**D10 41 130**
RFML 10 PP/TV	PP conductive	PTFE	FKM	3,0 kg	**D10 41 140**
RFML 10 PP/EE	PP conductive	EPDM	EPDM	3,0 kg	**D10 41 210**
RFML 10 PP/VV	PP conductive	FKM	FKM	3,0 kg	**D10 41 310**
RFML 10 PTFE/TK	PTFE conductive	PTFE	FFKM	5,0 kg	**D10 01 120**
RFML 10 PTFE/TE	PTFE conductive	PTFE	EPDM	5,0 kg	**D10 01 130**
RFML 10 PTFE/TV	PTFE conductive	PTFE	FKM	5,0 kg	**D10 01 140**
RFML 10 PTFE/EE	PTFE conductive	EPDM	EPDM	5,0 kg	**D10 01 210**
RFML 10 PTFE/VV	PTFE conductive	FKM	FKM	5,0 kg	**D10 01 310**

FLUX air-operated diaphragm pump Type RFM 15 in Polypropylene (PP) or Polytetrafluorethylene (PTFE), ½"

Technical Data

Delivery rate max.	45 l/min
Operating pressure max.	7 bar
Suction head, dry	up to 3 m
Suction head, liquid-filled	up to 8 m
Max. size of solids	2 mm
Connection pump	
suction side	G ½ (BSP ½" female)
discharge side	G ½ (BSP ½" female)
Connection air	
inlet	G ¼ (BSP ¼" female)
outlet*	G ¼ (BSP ¼" female)

*with silencer

Performance Chart RFM 15 / RFML 15

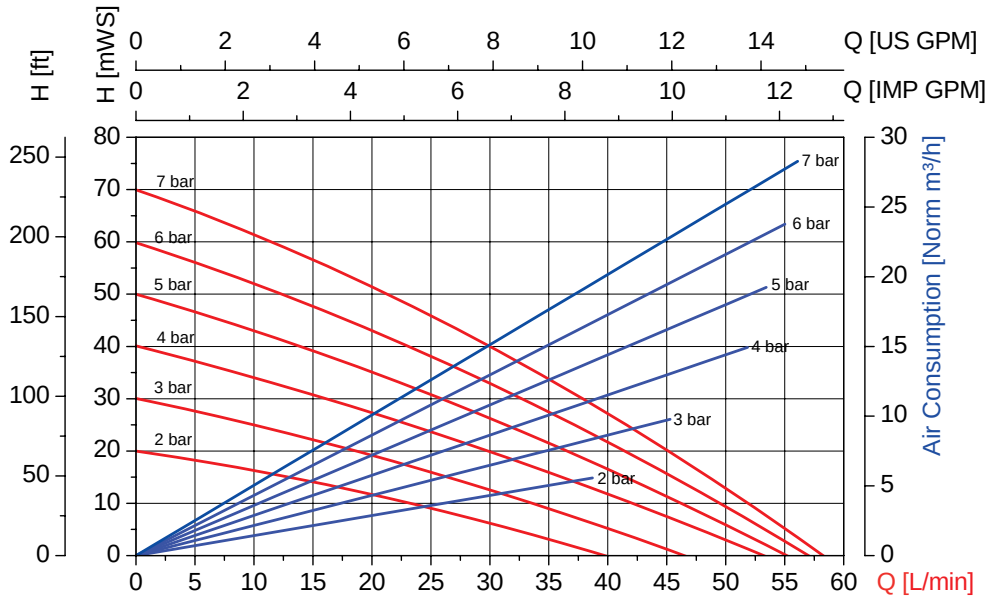

Values ± 10 % with water at 20 °C

Type / Material	Pump housing	Diaphragm/ Ball	Seal	Weight	Part No.
RFM 15 PP/NN	PP	NBR	NBR	5,0 kg	**D15 40 010**
RFM 15 PP/TK	PP	PTFE	FFKM	5,0 kg	**D15 40 120**
RFM 15 PP/TE	PP	PTFE	EPDM	5,0 kg	**D15 40 130**
RFM 15 PP/TV	PP	PTFE	FKM	5,0 kg	**D15 40 140**
RFM 15 PP/EE	PP	EPDM	EPDM	5,0 kg	**D15 40 210**
RFM 15 PP/VV	PP	FKM	FKM	5,0 kg	**D15 40 310**
RFM 15 PTFE/TK	PTFE	PTFE	FFKM	10,0 kg	**D15 00 120**
RFM 15 PTFE/TE	PTFE	PTFE	EPDM	10,0 kg	**D15 00 130**
RFM 15 PTFE/TV	PTFE	PTFE	FKM	10,0 kg	**D15 00 140**
RFM 15 PTFE/EE	PTFE	EPDM	EPDM	10,0 kg	**D15 00 210**
RFM 15 PTFE/VV	PTFE	FKM	FKM	10,0 kg	**D15 00 310**

FLUX AIR-OPERATED DIAPHRAGM PUMP TYPE RFML 15 IN POLYPROPYLENE (PP) OR POLYTETRAFLUORETHYLENE (PTFE), ½"

Electrically conductive for use in hazardous areas according to ATEX-Directive 94/9/EG

Technical Data

Delivery rate max.	45 l/min
Operating pressure max.	7 bar
Suction head, dry	up to 3 m
Suction head, liquid-filled	up to 8 m
Max. size of solids	2 mm
Explosion-proof to	Ex II 2 G cp IIB X
PTB Registration No.	04 ATEX D102-1
Connection pump	
suction side	G ½ (BSP ½" female)
discharge side	G ½ (BSP ½" female)
Connection air	
inlet	G ¼ (BSP ¼" female)
outlet*	G ¼ (BSP ¼" female)

*with silencer

Dimensions RFM 15 / RFML 15

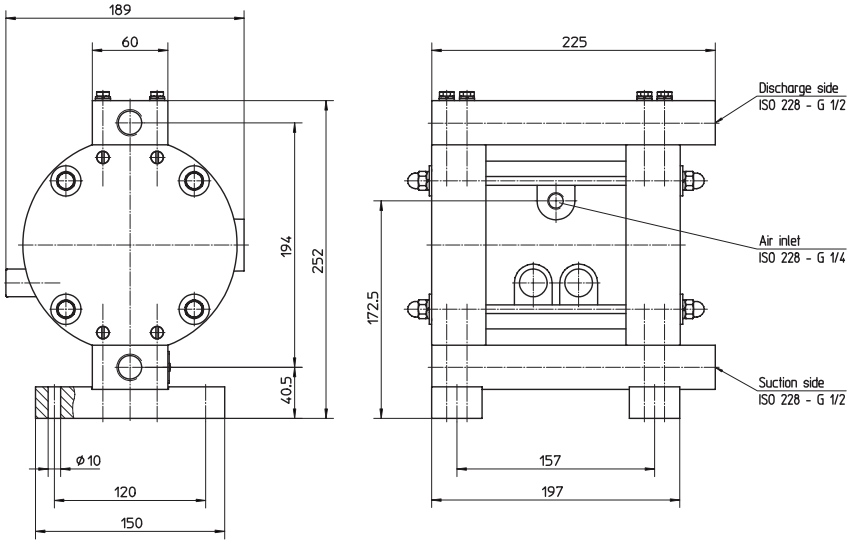

Type / Material	Pump housing	Diaphragm/ Ball	Seal	Weight	Part No.
RFML 15 PP/NN	PP conductive	NBR	NBR	5,0 kg	**D15 41 010**
RFML 15 PP/TK	PP conductive	PTFE	FFKM	5,0 kg	**D15 41 120**
RFML 15 PP/TE	PP conductive	PTFE	EPDM	5,0 kg	**D15 41 130**
RFML 15 PP/TV	PP conductive	PTFE	FKM	5,0 kg	**D15 41 140**
RFML 15 PP/EE	PP conductive	EPDM	EPDM	5,0 kg	**D15 41 210**
RFML 15 PP/VV	PP conductive	FKM	FPM	5,0 kg	**D15 41 310**
RFML 15 PTFE/TK	PTFE conductive	PTFE	FFKM	10,0 kg	**D15 01 120**
RFML 15 PTFE/TE	PTFE conductive	PTFE	EPDM	10,0 kg	**D15 01 120**
RFML 15 PTFE/TV	PTFE conductive	PTFE	FKM	10,0 kg	**D15 01 120**
RFML 15 PTFE/EE	PTFE conductive	EPDM	EPDM	10,0 kg	**D15 01 210**
RFML 15 PTFE/VV	PTFE conductive	FKM	FKM	10,0 kg	**D15 01 310**

FLUX air-operated diaphragm pump Type RFM 25 in Polypropylene (PP) or Polytetrafluorethylene (PTFE), 1″

Technical Data

Delivery rate max.	110 l/min
Operating pressure max.	7 bar
Suction head, dry	up to 3 m
Suction head, liquid-filled	up to 6 m
Max. size of solids	3 mm
Connection pump	
suction side	G 1 (BSP 1″ female)
discharge side	G 1 (BSP 1″ female)
Connection air	
inlet	G 1/4 (BSP 1/4″ female)
outlet*	G 1/4 (BSP 1/4″ female)

*with silencer

Performance Chart RFM 25 / RFML 25

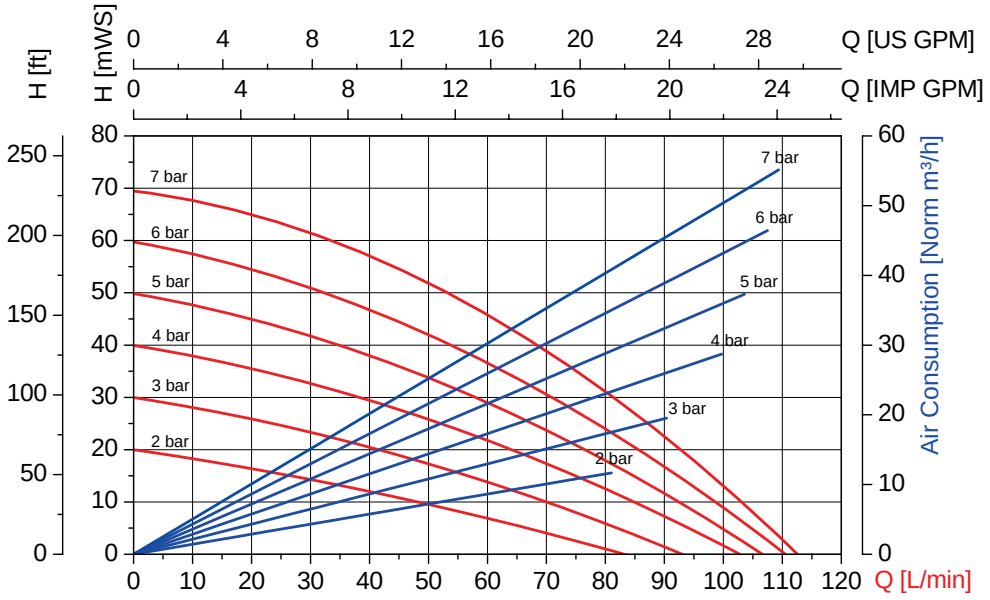

Values ± 10 % with water at 20 °C

Type / Material	Pump housing	Diaphragm/ Ball	Seal	Weight	Part No.
RFM 25 PP/NN	PP	NBR	NBR	12,0 kg	**D25 40 010**
RFM 25 PP/TK	PP	PTFE	FFKM	12,0 kg	**D25 40 120**
RFM 25 PP/TE	PP	PTFE	EPDM	12,0 kg	**D25 40 130**
RFM 25 PP/TV	PP	PTFE	FKM	12,0 kg	**D25 40 140**
RFM 25 PP/EE	PP	EPDM	EPDM	12,0 kg	**D25 40 210**
RFM 25 PP/VV	PP	FKM	FKM	12,0 kg	**D25 40 310**
RFM 25 PTFE/TK	PTFE	PTFE	FFKM	26,0 kg	**D25 00 120**
RFM 25 PTFE/TE	PTFE	PTFE	EPDM	26,0 kg	**D25 00 130**
RFM 25 PTFE/TV	PTFE	PTFE	FKM	26,0 kg	**D25 00 140**
RFM 25 PTFE/EE	PTFE	EPDM	EPDM	26,0 kg	**D25 00 210**
RFM 25 PTFE/VV	PTFE	FKM	FKM	26,0 kg	**D25 00 310**

FLUX AIR-OPERATED DIAPHRAGM PUMP TYPE RFML 25 IN POLYPROPYLENE (PP) OR POLYTETRAFLUORETHYLENE (PTFE), 1"

Electrically conductive for use in hazardous areas according to ATEX-Directive 94/9/EG

Technical Data

Delivery rate max.	110 l/min
Operating pressure max.	7 bar
Suction head, dry	up to 3 m
Suction head, liquid-filled	up to 6 m
Max. size of solids	3 mm
Explosion-proof to	Ex II 2 G cp IIB X
PTB Registration No.	04 ATEX D102-1
Connection pump	
suction side	G 1 (BSP 1" female)
discharge side	G 1 (BSP 1" female)
Connection air	
inlet	G 1/4 (BSP 1/4" female)
outlet*	G 1/4 (BSP 1/4" female)

*with silencer

Dimensions RFM 25 / RFML 25

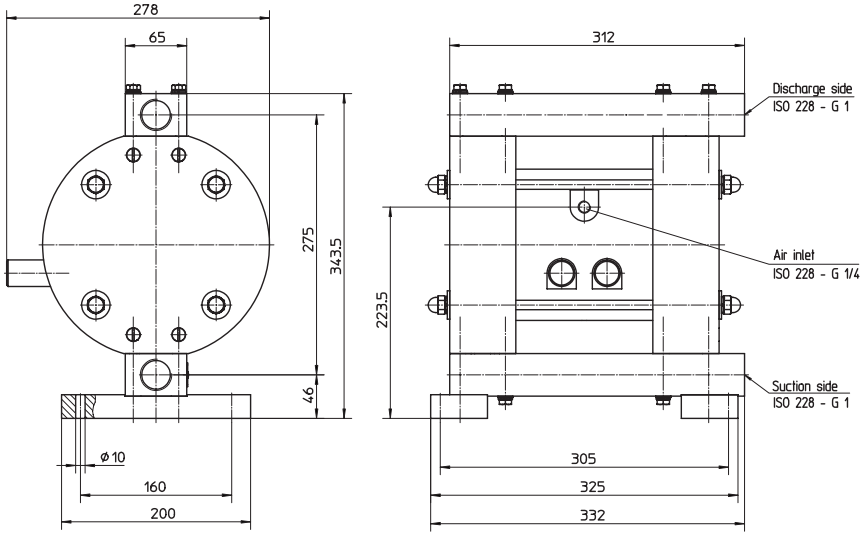

Type / Material	Pump housing	Diaphragm/ Ball	Seal	Weight	Part No.
RFML 25 PP/NN	PP conductive	NBR	NBR	12,0 kg	**D25 41 010**
RFML 25 PP/TK	PP conductive	PTFE	FFKM	12,0 kg	**D25 41 120**
RFML 25 PP/TE	PP conductive	PTFE	EPDM	12,0 kg	**D25 41 130**
RFML 25 PP/TV	PP conductive	PTFE	FKM	12,0 kg	**D25 41 140**
RFML 25 PP/EE	PP conductive	EPDM	EPDM	12,0 kg	**D25 41 210**
RFML 25 PP/VV	PP conductive	FKM	FKM	12,0 kg	**D25 41 310**
RFML 25 PTFE/TK	PTFE conductive	PTFE	FFKM	26,0 kg	**D25 01 120**
RFML 25 PTFE/TE	PTFE conductive	PTFE	EPDM	26,0 kg	**D25 01 130**
RFML 25 PTFE/TV	PTFE conductive	PTFE	FKM	26,0 kg	**D25 01 140**
RFML 25 PTFE/EE	PTFE conductive	EPDM	EPDM	26,0 kg	**D25 01 210**
RFML 25 PTFE/VV	PTFE conductive	FKM	FKM	26,0 kg	**D25 01 310**

FLUX AIR-OPERATED DIAPHRAGM PUMP TYPE RFM 40 IN POLYPROPYLENE (PP) OR POLYTETRAFLUORETHYLENE (PTFE), 1 1/2"

Technical Data

Delivery rate max.	375 l/min
Operating pressure max.	7 bar
Suction head, dry	up to 4,5 m
Suction head, liquid-filled	up to 8 m
Max. size of solids	7,5 mm
Connection pump	
suction side	G 1 1/2 (BSP 1 1/2" female)
discharge side	G 1 1/2 (BSP 1 1/2" female)
Connection air	
inlet	G 1/2 (BSP 1/2" female)
outlet*	G 1/2 (BSP 1/2" female)

*with silencer

Performance Chart RFM 40

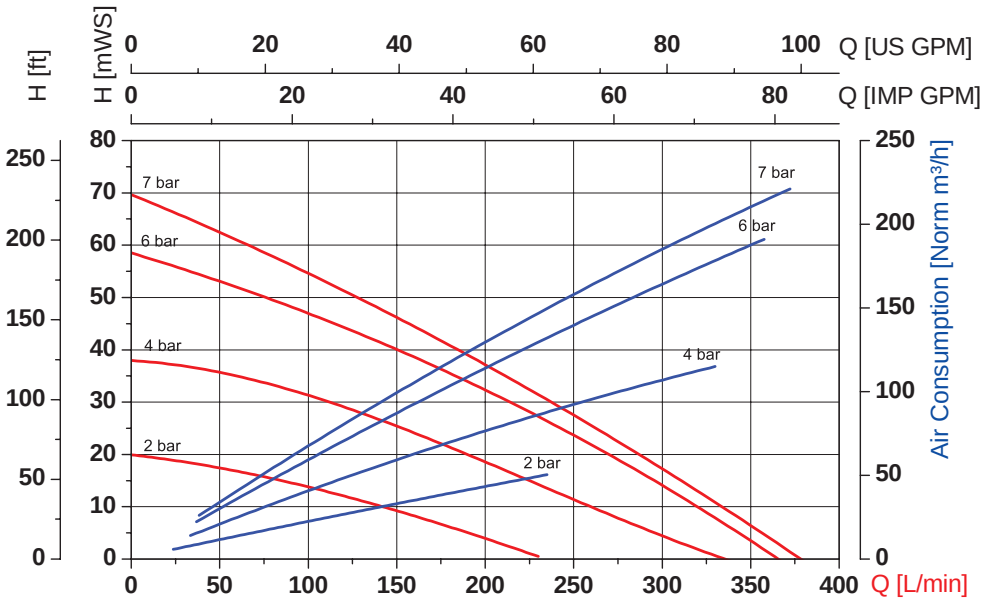

Values ± 10 % with water at 20 °C

Type / Material	Pump housing	Diaphragm/ Ball	Seal	Weight	Part No.
RFM 40 PP/NN	PP	NBR	NBR	47,0 kg	**D40 40 015**
RFM 40 PP/TK	PP	PTFE	FFKM/FEP	47,0 kg	**D40 40 125**
RFM 40 PP/TE	PP	PTFE	EPDM	47,0 kg	**D40 40 135**
RFM 40 PP/TV	PP	PTFE	FKM	47,0 kg	**D40 40 145**
RFM 40 PP/EE	PP	EPDM	EPDM	47,0 kg	**D40 40 215**
RFM 40 PP/VV	PP	FKM	FKM	47,0 kg	**D40 40 315**
RFM 40 PTFE/TK	PTFE	PTFE	FFKM	98,0 kg	**D40 00 125**
RFM 40 PTFE/TE	PTFE	PTFE	EPDM	98,0 kg	**D40 00 135**
RFM 40 PTFE/TV	PTFE	PTFE	FKM	98,0 kg	**D40 00 145**
RFM 40 PTFE/EE	PTFE	EPDM	EPDM	98,0 kg	**D40 00 215**
RFM 40 PTFE/VV	PTFE	FKM	FKM	98,0 kg	**D40 00 315**

Dimensions RFM 40

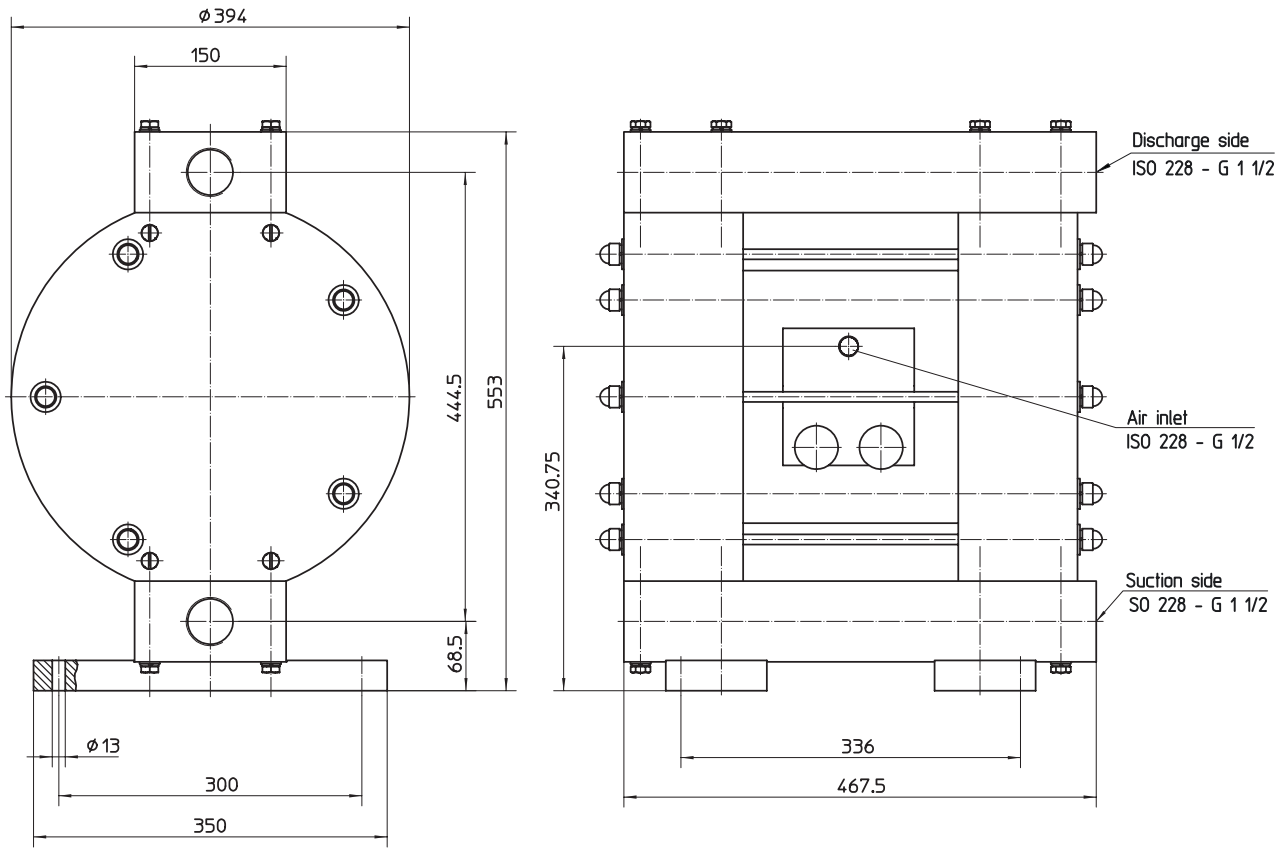

Pressure controller with filter and speed regulator, mounted onto pump

Pump Type	Connection	Part No./Weight
RFM 10	G 1/4 – G 3/8 (1/4"–3/8" female)	**D01 00 410**/0,70 kg
RFM 15/25	G 1/4 – G 1/4 (1/4"–1/4" female)	**D01 00 412**/0,72 kg
RFM 40	G 1/2 – G 1/2 (1/2"–1/2" female)	**D01 00 403**/2,20 kg

Pressure controller with filter and speed regulator, mounted onto pump, version for use in hazardous areas

Pump Type	Connection	Part No./Weight
RFML 10	G 1/4 – G 3/8 (1/4"–3/8" female)	**D01 00 320**/0,96 kg
RFML 15/25	G 1/4 – G 1/4 (1/4"–1/4" female)	**D01 00 322**/0,96 kg

Pulsation damper, passive type, max. operating pressure 8 bar

Description	Diaphragm	Part No./Weight
PDP 15 PP/N	NBR	**D01 15 400**/1,20 kg
PDP 15 PP/E	EPDM	**D01 15 420**/1,20 kg
PDP 15 PP/V	FKM	**D01 15 430**/1,20 kg
PDP 25 PP/N	NBR	**D01 25 400**/2,00 kg
PDP 25 PP/E	EPDM	**D01 25 420**/2,00 kg
PDP 25 PP/V	FKM	**D01 25 430**/2,00 kg
PDP 40 PP/N	NBR	**D01 40 400**/4,00 kg
PDP 40 PP/E	EPDM	**D01 40 420**/4,00 kg
PDP 40 PP/V	FKM	**D01 40 430**/4,00 kg

Connection for filling of pulsation damper

Version	Connection	Part No./Weight
Material: brass	G 1/4 - filling end	**D01 00 000**/0,01 kg

Stroke counter complete with 5/2-way valve

Pump Type	Part No./Weight
RFM 10/15	**D01 00 101**/0,02 kg
RFM 25	**D01 00 102**/0,02 kg
RFM 40	**D01 00 103**/0,02 kg
Connecting cable, 5 m long	
for use with digital display unit	**934 08 038**/0,20 kg
External digital display unit	
with mounting flange	**001 42 008**/0,70 kg

Hose connection complete, consisting of: hose connector with union nut and seal, mounting onto the pump via reduction nipple

Pump Type	Material	Connection	Part No./Weight
RFM 10/15	PP	DN 13 – G 1 (1″ female)	**959 04 073**/0,02 kg
	PVDF	DN 13 – G 1 (1″ female)	**959 04 071**/0,02 kg
	PP	DN 19 – G 1 (1″ female)	**959 04 074**/0,02 kg
	PVDF	DN 19 – G 1 (1″ female)	**959 04 072**/0,02 kg
RFM 25	PP	DN 25 – G 1 1/4 (1 1/4″ female)	**959 04 052**/0,03 kg
	PVDF	DN 25 – G 1 1/4 (1 1/4″ female)	**959 04 102**/0,03 kg
	PP	DN 32 – G 1 1/4 (1 1/4″ female)	**959 04 054**/0,03 kg
	PVDF	DN 32 – G 1 1/4 (1 1/4″ female)	**959 04 103**/0,05 kg
RFM 40	PP	DN 32 – G 2 (2″ female)	**959 04 010**/0,05 kg
	PVDF	DN 32 – G 2 (2″ female)	**959 04 084**/0,05 kg
	PP	DN 38 – G 2 (2″ female)	**959 04 011**/0,14 kg
	PVDF	DN 38 – G 2 (2″ female)	**959 04 085**/0,14 kg

Reduction nipple for connecting the hose connection complete onto the pump

Pump Type	Material	Connection	Part No./Weight
RFM 10	PP	G 1 A – G 3/8 A (1″ – 3/8″ male)	**959 06 159**/0,01 kg
	PVDF	G 1 A – G 3/8 A (1″ – 3/8″ male)	**959 06 169**/0,01 kg
RFM 15	PP	G 1 A – G 1/2 A (1″ – 1/2″ male)	**959 06 160**/0,01 kg
	PVDF	G 1 A – G 1/2 A (1″ – 1/2″ male)	**959 06 170**/0,02 kg
RFM 25	PP	G 1 1/4 A – G 1 A (1 1/4″ – 1″ male)	**959 06 161**/0,03 kg
	PVDF	G 1 1/4 A – G 1 A (1 1/4″ – 1″ male)	**959 06 171**/0,03 kg
RFM 40	PP	G 2 A – G 1 1/2 A (2″ – 1 1/2″ male)	**959 06 162**/0,03 kg
	PVDF	G 2 A – G 1 1/2 A (2″ – 1 1/2″ male)	**959 06 172**/0,04 kg

Suction tubes for Type RFM 10, RFM 15 and RFM 25, with thread connection G 3/4 A (3/4″ male) on bottom end

Connection top end	Material	Immersion length	Ø	Part No./Gewicht
Hose nozzle DN 13	PP	27″	3/4″	**959 18 020**/0,17 kg
		39″		**959 18 021**/0,17 kg
Hose nozzle DN 25	PP	27″	1″	**959 18 008**/0,17 kg
		39″		**959 18 009**/0,17 kg
Male thread G 1 A	PP	27″	1″	**959 18 010**/0,10 kg
		39″		**959 18 011**/0,10 kg
Male thread G 1 1/4 A	PP	27″	1″	**959 18 012**/0,10 kg
		39″		**959 18 013**/0,10 kg

Suction strainers for suction tubes

Connection	Material	Ø	Part No./Weight
Female thread G 1/2	PP	3/4″	**001 10 335**/0,01 kg
Female thread G 3/4	PP	1″	**001 10 324**/0,02 kg

Fittings for electrically conductive pumps on request

Function features in detail

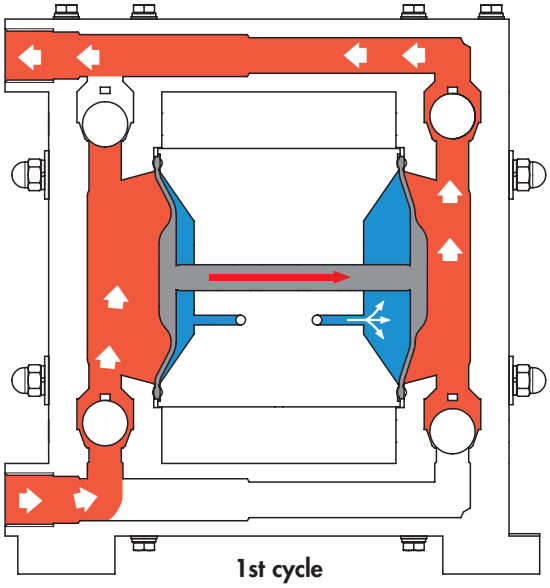

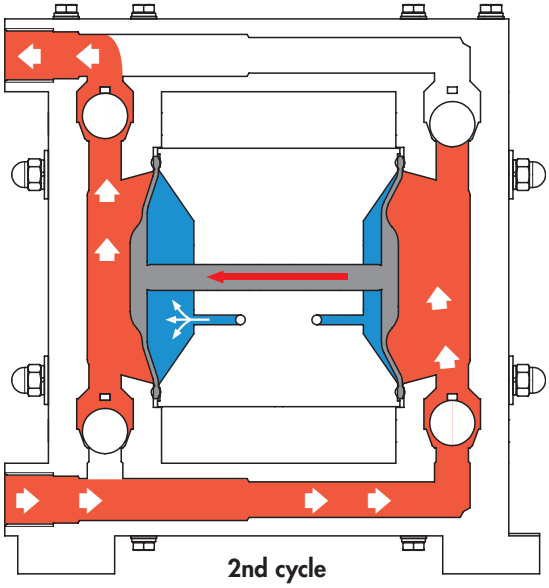

FLUX air-operated diaphragm pumps are positive displacement pumps consisting of two pump housings and one control valve part. Diaphragms within the pump housings securely separate the liquid section (red) from the air section (blue). Both diaphragms are connected by a selector shaft which is located in the control valve part.

Compressed air inflating alternately the air sections causes a movement of the diaphragms (1st and 2nd cycle). The subsequent transfer operation is controlled by a control valve which is easy to dismantle.
Due to their solid construction, the pumps are designed for continuous operation and do not require any special maintenance.
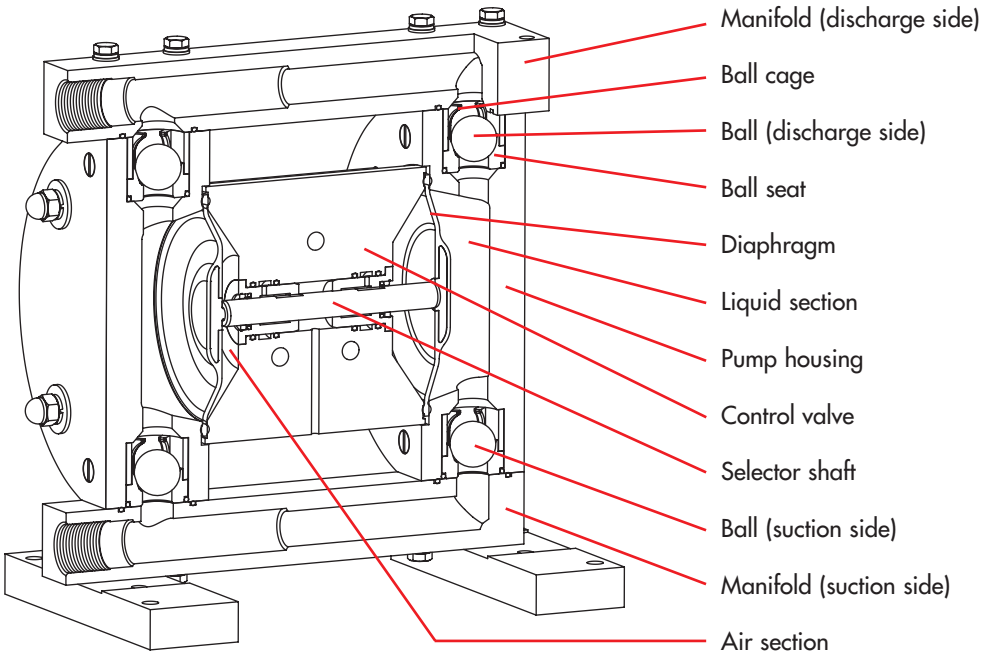
Construction features in detail