800asb Adjustable Case Sealer

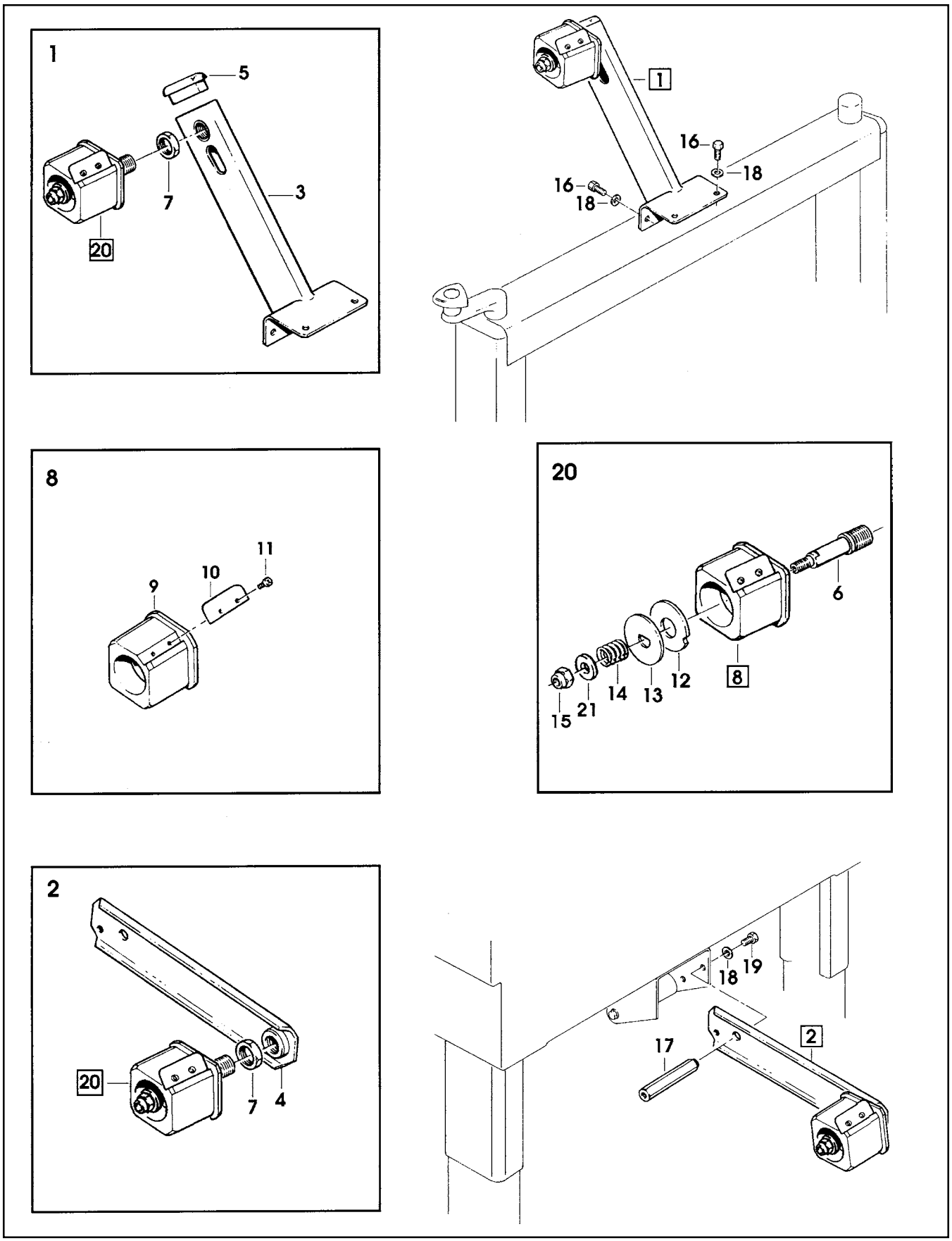

Figure 2799

Figure 2799

Ref. No.	3M Part No.	Description
2799-1	78-8070-1564-5	Tape Drum Bracket Assembly
2799-2	78-8070-1565-2	Tape Drum Bracket Assembly
2799-3	78-8070-1566-0	Bracket – Tape Drum
2799-4	78-8070-1395-4	Bracket – Bushing Assembly
2799-5	78-8070-1568-6	Cap – Bracket
2799-6	78-8076-4519-3	Shaft – Tape Drum
2799-7	78-8017-9169-6	Nut – M18 x 1
2799-8	78-8070-1569-4	Tape Drum Assembly – 2 Inch Wide
2799-9	78-8052-6749-5	Tape Drum Assembly
2799-10	78-8052-6268-6	Leaf Spring
2799-11	26-1002-5753-9	Screw – Self-Tapping
2799-12	78-8060-8172-1	Washer – Friction
2799-13	78-8052-6271-0	Washer – Tape Drum
2799-14	78-8100-1048-4	Spring – Core Holder
2799-15	78-8017-9077-1	Nut – Self-Locking, M10 x 1
2799-16	78-8032-0375-7	Screw – Hex Hd, M6 x 16
2799-17	78-8070-1215-4	Spacer – Stud
2799-18	26-1000-0010-3	Washer – Flat M6
2799-19	78-8010-7169-3	Screw – Hex Hd, M6 x 12
2799-20	78-8060-8474-1	Tape Drum Assembly
2799-21	78-8052-6566-3	Washer – Friction